

Product Brochure

COSMOS™



WEATHER-RESISTANT OUTDOOR TELEVISION

Manufactured by Evervue, Cosmos Outdoor TV brings outdoor TV entertainment to a whole new level with its superior and state-of-the-art features and technology. Engineered with many years of experience and installations in almost all parts of the world, Cosmos Outdoor TV is a true outdoor TV that has been tested and experienced for all seasons, and under all conditions.

FEATURES

- **Weather-Resistant**
- **4K Ultra HD** (4K ULTRA HD)
- **Climate Control Technology**
- **Rain/Sun Cap**
- **Anti Glare**
- **Audio Streamers**
- **Compartment for Set-Top Box**
- **Safe 24 Volts** (24-V)
- **Smart TV with Google Assistant**

TV FINISHES



Brushed Stainless Steel



Matte Moss Green Stainless Steel



Matte Black Stainless Steel



Matte White Stainless Steel

Cosmos Outdoor TV Sizes



Cosmos Outdoor TV 32” 4K Ultra HD
COSTV-32



Cosmos Outdoor TV 40” 4K Ultra HD
COSTV-40



Cosmos Outdoor TV 50” 4K Ultra HD
COSTV-50



Cosmos Outdoor TV 60” 4K Ultra HD
COSTV-60



Cosmos Outdoor TV 75” 4K Ultra HD
COSTV-75



Cosmos Outdoor TV 85” 4K Ultra HD
COSTV-85



Cosmos Outdoor TV 100” 4K Ultra HD
COSTV-100



Cosmos Outdoor TV 110” 4K Ultra HD
COSTV-110

Cosmos Outdoor TV Specifications

Diagonal Screen Size	32”	40”	50”	60”	75”	85”	100”	110"
Screen Resolution	3840 x 2160, 4K Ultra HD (4 times the resolution of Full HD)							
TV Brightness (Actual)	350nit	350nit	500nit	350nit	500nit	500nit	500nit	500nit
Material TV Housing	Stainless Steel S304. Black version: powder coated Stainless Steel S304. Back side powder coated aluminum.							
Front Material	Heat strengthened, non-glare security glass.							
Cooling Technology	Duo Fan Active Cooling System (Turns on automatically if the temperature passes 85 degrees Fahrenheit (if connected to power)).							
IP Rating	IPX4							
Heating Technology	10-watt low voltage heating system. (Turns on if the temperature drops below 40 degrees Fahrenheit (if connected to power)).							
Power	24 VDC, 14.6A. World universal power supply 100-240V included. Brand: MeanWell. UL listed.				24 VDC, 18.8A. World universal power supply 100-240V included. Brand: MeanWell. UL listed.			
Internal Speakers	2x 10-watt internal speakers							
Inputs	2x HDMI (CEC, ARC and EDID), Power							
Outputs	Amplified audio, Non-amplified audio							
Integrated set top compartment	Size 6” x 8” x 1.3” (compatible with Apple TV, Fire TV, Android TV, and many other set-top boxes. Some set-top boxes need 100-240V power. You need to power this directly, and an IR repeater may be necessary).							
Net Weight	28lbs / 12.5kg	40lbs / 18kg	62lbs / 28kg	77lbs / 35kg	132lbs / 60kg	187lbs / 85kg	256lbs / 116kg	344lbs / 156kg
TV Overall Dimensions (in)	28.8 x 16.8 x 2.4	35.8 x 20.5 x 2.4	44.6 x 25.7 x 2.4	51.5 x 29.8 x 2.4	66.6 x 38.1 x 2.4	76.6 x 44.0 x 3.9	86.9 x 49.6 x 3.9	98.1 x 56.2 x 4.1
TV Overall Dimensions (mm)	732 x 427 x 60	910 x 520 x 60	1132 x 652 x 60	1307 x 757 x 60	1691 x 967 x 60	1945 x 1117 x 100	2208 x 1260 x 100	2491 x 1428 x 105
VESA Bracket	200 x 200	200 x 200	400 x 400	400 x 400	600 x 500	600 x 400	800 x 400	450 x 600 (2 sets)
Standard Included	1x TV unit, 1x rain/sun cap, 2x audio streamers, 1x power supply, 1x 20ft. power cable, 1x remote control with holder, maintenance kit.							
Cover (optional)	Duo layer, waterproof nylon and 3mm neoprene.							
Power Cable	Outdoor quality, insulated 2x 2.0mm. Extendable up to 20ft.							
Audio Cable	Outdoor quality, insulated 2x 1.5mm. Extendable up to 20ft.							

Cosmos Outdoor TV Comparison Table

Cosmos Outdoor TV		Other Outdoor TV
Powered by low 24 volts, Cosmos Outdoor TV is safe to use outdoors.		110 to 240 volts on wet grass or near a pool can be dangerous.
Equipped with high-quality speakers and additional tweeters, Cosmos has impressive audio quality.		Check with vendor if the speakers are included and if there are tweeters installed. It makes a big difference.
Patented audio streamers are very efficient and direct the audio towards you.		No, sound is spread out which reduces the audio performance and quality.
Patented weather cap protects Cosmos from the rain, snow, leaves and small animals which makes Cosmos the ultimate TV for outdoors.		No, not available.
All Cosmos Outdoor TVs come standard with a fully automated heating and cooling system. Wherever you want to use Cosmos, it's ready.		No, only on the higher-priced models, and often there is no heater installed that keeps the moisture out in the winter.
Cosmos has often been recognized as the best design for Outdoor TVs.		3" or more (for system with temperature control system).
Cosmos has a Stainless Steel (S304) case and this makes the TV very strong, durable, and well protected.		No aluminum housing.
With a bezel of only 0.6", Cosmos is the most versatile looking outdoor TV.		1" or 2" bezels give the TV an industrial, old-fashioned look.

Cosmos Outdoor TV		Other Outdoor TV
Equipped as standard with a real 4K resolution supporting the latest available Android version (may vary per market).		Not included, or with a dongle that does not support 4K, or not equipped with sufficient processing speed for great performance.
Update your Cosmos Outdoor TV with the latest technology. Simply replace the Set Top Box and your Cosmos is as new again.		No. Integrated Smart TV system makes your TV old after a few years when better technology is available.
Cosmos Outdoor TV offers high-quality, beautifully made Neoprene covers in many styles. Also available in Sunbrella fabric.		No, usually a simple cover that does not really protect.
Enjoy your hot tub in a whole new way with the Cosmos Hot Tub package.		No, not available.
Cosmos Outdoor TV comes standard with 20 ft / 6m power cable and ready to use when it arrives.		Usually comes with a 5 ft / 1.5m power cable and might need to buy extra power cable.
Complete your Outdoor TV experience with our Outdoor Audio systems.		No, not available.
Comes standard with a remote control with built-in keyboard. Great for navigating the Smart TV applications.		No, and difficult to use the Smart TV applications.
Cosmos Outdoor TV has a wide-angle infrared receiver that separates it from regular indoor TVs.		No, you need to stay in front of the TV to use the remote control.
Cosmos offers many high quality mounts to choose from. Extra stable to secure your Cosmos TV against wind, rain, animals.		No, usually residential quality brackets made of regular steel that can rust.





SELF STANDING FLOOR MOUNT

DETAILS

- Available for Cosmos Outdoor TV sizes: 32", 40", 50", 60", 75", and 85"
- Completely made of stainless steel (S304)
- Extra-heavy and solid stainless-steel base
- Very stable, rustproof and maintenance-free

FEATURES

Stainless Steel

Made of commercial-grade stainless steel (**S304**), the mounts are almost indestructible, do not rust, are easy to clean and do not need maintenance.

Cable Management

The power cable and HDMI cable (if used) are inside the tubes and well protected against weather and animals.

Stability

Outdoor TVs are exposed to extreme conditions and it's very important to mount the TV well. This can only be achieved with carefully designed mounts and brackets.

VESA Compatible

Cosmos Outdoor TV brackets and mounts are VESA compatible and therefore suitable for all TVs.

VESA BRACKETS

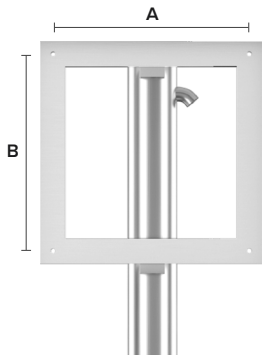

TV Size	A	B
32”	200mm	200mm
40”	200mm	200mm
50”	400mm	400mm
60”	400mm	400mm
75”	600mm	500mm
85”	600mm	400mm

Self Standing Floor Mount Specifications

For Cosmos Outdoor TV 32” to 75”

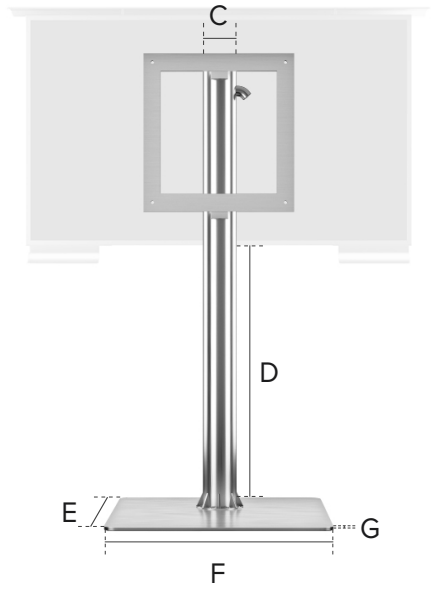

For Cosmos Outdoor TV 85”

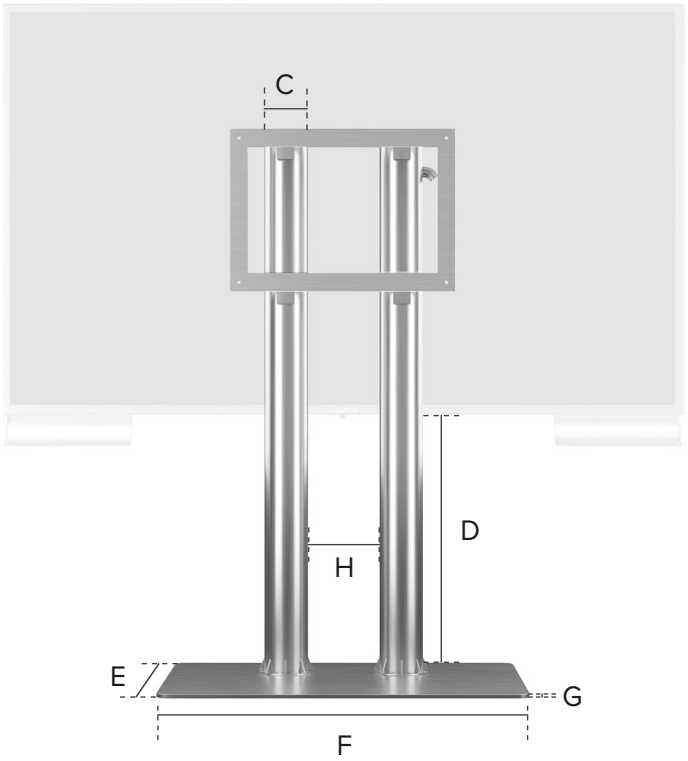

Product Code	TV Size	C	D	E	F	G	H
COSMT-SSF-32	32”	3.15” / 80mm	30.00” / 760mm	15.00” / 381mm	20.00” / 508mm	0.40” / 10mm	-
COSMT-SSF-40	40”	3.15” / 80mm	30.00” / 760mm	15.00” / 381mm	20.00” / 508mm	0.40” / 10mm	-
COSMT-SSF-50	50”	4.00” / 102mm	30.00” / 760mm	20.00” / 508mm	25.00” / 635mm	0.40” / 10mm	-
COSMT-SSF-60	60”	4.00” / 102mm	30.00” / 760mm	20.00” / 508mm	25.00” / 635mm	0.40” / 10mm	-
COSMT-SSF-75	75”	4.50” / 114mm	30.00” / 760mm	25.00” / 635mm	30.00” / 760mm	0.40” / 10mm	-
COSMT-SSF-85	85”	5.00” / 127mm	30.00” / 760mm	25.00” / 635mm	40.00” / 1016mm	0.40” / 10mm	-





PERMANENT FLOOR MOUNT

DETAILS

- Available for all Cosmos Outdoor TV sizes
- Completely made of stainless steel (S304)
- Power cable insert from the bottom or from the side
- Very stable, rustproof and maintenance-free

FEATURES

Stainless Steel

Made of commercial-grade stainless steel (**S304**), the mounts are almost indestructible, do not rust, are easy to clean and do not need maintenance.

Cable Management

The power cable and HDMI cable (if used) are inside the tubes, and well protected against weather and animals.

Secured

Perfectly balanced mounts with a sturdy and heavy base to assure perfect stand to withstand any harsh weather.

VESA Compatible

Cosmos Outdoor TV brackets and mounts are VESA compatible and therefore suitable for all TVs.

VESA BRACKETS

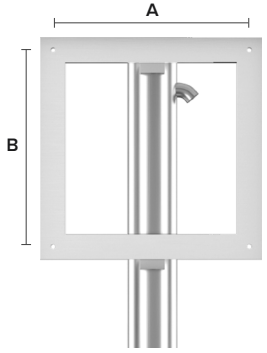

TV Size	A	B
32”	200mm	200mm
40”	200mm	200mm
50”	400mm	400mm
60”	400mm	400mm
75”	600mm	500mm
85”	600mm	400mm
100”	800mm	400mm
110”	450mm(2 sets)	600mm (2 sets)

Permanent Floor Mount Specifications

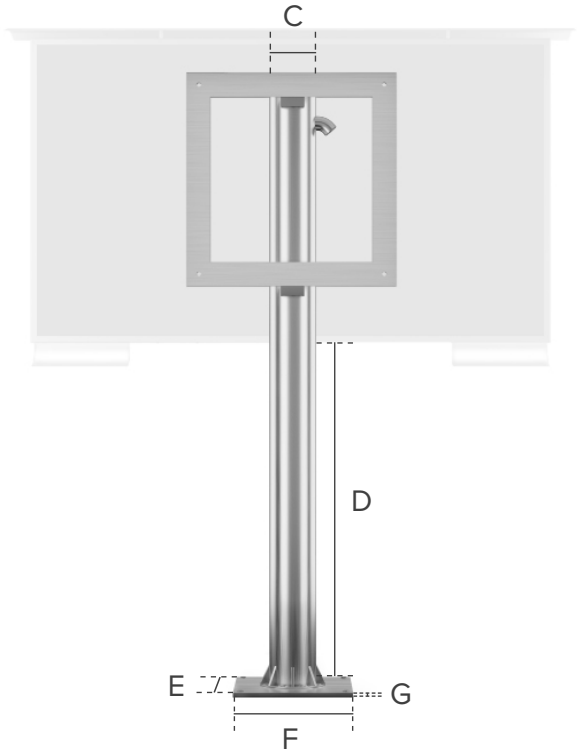

Product Code	TV Size	C	D	E	F	G
COSMT-PF-32	32”	3.15”/80mm	30.00”/760mm	9.58”/243mm	9.58”/243mm	0.40”/10mm
COSMT-PF-40	40”	3.15”/80mm	30.00”/760mm	9.58”/243mm	9.58”/243mm	0.40”/10mm
COSMT-PF-50	50”	4.00”/102mm	30.00”/760mm	9.58”/243mm	9.58”/243mm	0.40”/10mm
COSMT-PF-60	60”	4.00”/102mm	30.00”/760mm	9.58”/243mm	9.58”/243mm	0.40”/10mm
COSMT-PF-75	75”	4.50”/114mm	30.00”/760mm	9.58”/243mm	9.58”/243mm	0.40”/10mm
COSMT-PF-85	85”	5.00”/127mm	30.00”/760mm	9.58”/243mm	9.58”/243mm	0.40”/10mm
COSMT-PF-100	100”	6.00”/152mm	30.00”/760mm	9.58”/243mm	9.58”/243mm	0.40”/10mm
COSMT-PF-110	110”	6.00”/152mm	30.00”/760mm	9.58”/243mm	9.58”/243mm	0.40”/10mm





WHEELED FLOOR MOUNT

DETAILS

- Available for Cosmos Outdoor TV sizes: 32", 40", 50", 60", 75", and 85"
- Completely made of stainless steel (S304)
- Wheels on corners have a brake mechanism
- Power cable insert from the bottom or from the side
- Very stable, rustproof and maintenance-free

FEATURES

Stainless Steel

Made of commercial-grade stainless steel (**S304**), the mounts are almost indestructible, do not rust, are easy to clean and do not need maintenance.

Cable Management

The power cable and HDMI cable (if used) are inside the tubes, and well protected against weather and animals.

Stability

Outdoor TVs are exposed to extreme conditions and it's very important to mount the TV well. This can only be achieved with carefully designed mounts and brackets.

VESA Compatible

Cosmos Outdoor TV brackets and mounts are VESA compatible and therefore suitable for all TVs.

VESA BRACKETS

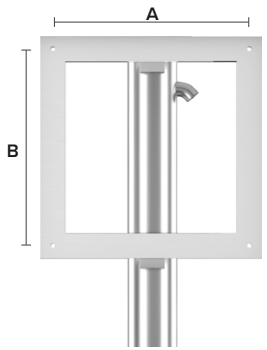

TV Size	A	B
32”	200mm	200mm
40”	200mm	200mm
50”	400mm	400mm
60”	400mm	400mm
75”	600mm	500mm
85”	600mm	400mm

Wheeled Floor Mount Specifications

For Cosmos Outdoor TV 32” to 75”

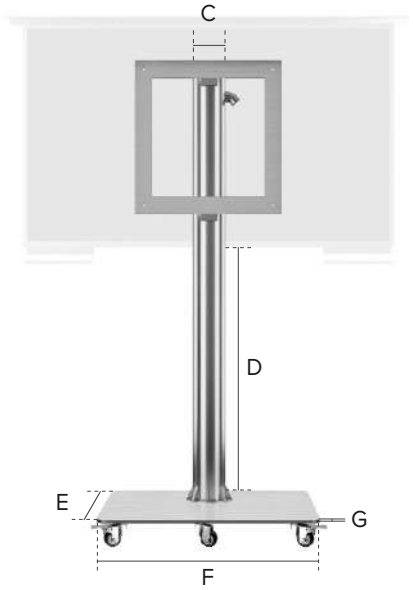

For Cosmos Outdoor TV 85”

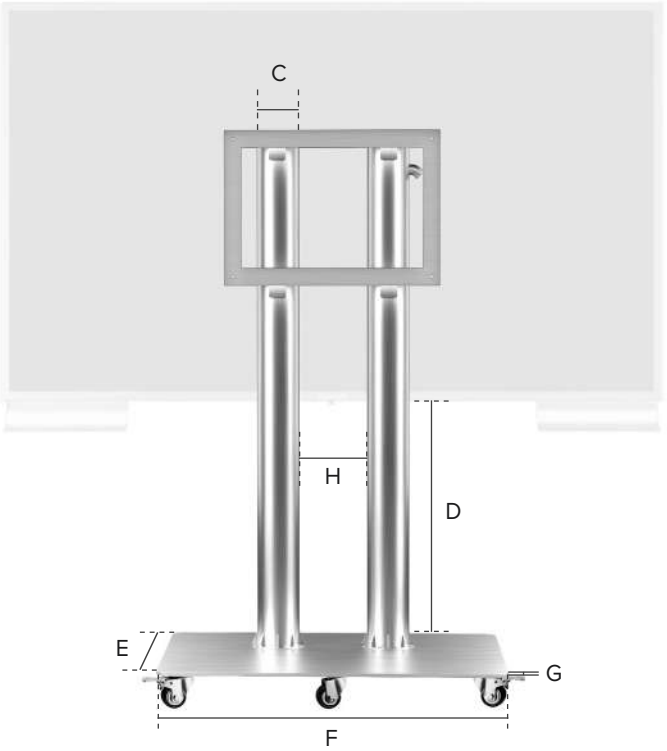

Product Code	TV Size	C	D	E	F	G	H
COSMT-WM-32	32”	3.15” / 80mm	30.00” / 760mm	15.00” / 381mm	20.00” / 508mm	0.40” / 10mm	-
COSMT-WM-40	40”	3.15” / 80mm	30.00” / 760mm	15.00” / 381mm	20.00” / 508mm	0.40” / 10mm	-
COSMT-WM-50	50”	4.00” / 102mm	30.00” / 760mm	20.00” / 508mm	25.00” / 635mm	0.40” / 10mm	-
COSMT-WM-60	60”	4.00” / 102mm	30.00” / 760mm	20.00” / 508mm	25.00” / 635mm	0.40” / 10mm	-
COSMT-WM-75	75”	4.50” / 114mm	30.00” / 760mm	25.00” / 635mm	30.00” / 760mm	0.40” / 10mm	-
COSMT-WM-85	85”	5.00” / 127mm	30.00” / 760mm	25.00” / 635mm	40.00” / 1016mm	0.40” / 10mm	-





STONE BASE SELF-STANDING FLOOR MOUNT

DETAILS

- Available for Cosmos Outdoor TV sizes: 32", 40", 50", 60", 75", and 85"
- Completely made of stainless steel (S304)
- Available in different types of real stone
- Fill the container with sand for optimal stability
- Power cable insert from the bottom or from the side

FEATURES

Stainless Steel
Made of commercial-grade stainless steel (**S304**), the mounts are almost indestructible, do not rust, are easy to clean and do not need maintenance.

Cable Management
The power cable and HDMI cable (if used) are inside the tubes and well protected against weather and animals.

Stability
Outdoor TVs are exposed to extreme conditions and it's very important to mount the TV well. This can only be achieved with carefully designed mounts and brackets.

VESA Compatible
Cosmos Outdoor TV brackets and mounts are VESA compatible and therefore suitable for all TVs.

VESA BRACKETS

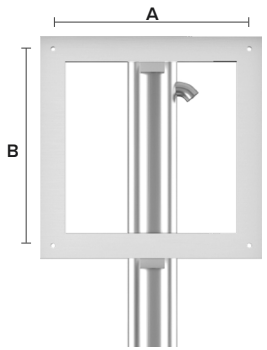

TV Size	A	B
32”	200mm	200mm
40”	200mm	200mm
50”	400mm	400mm
60”	400mm	400mm
75”	600mm	500mm
85”	600mm	400mm

Stone Base Self-Standing Floor Mount Specifications

For Cosmos Outdoor TV 32” to 75”

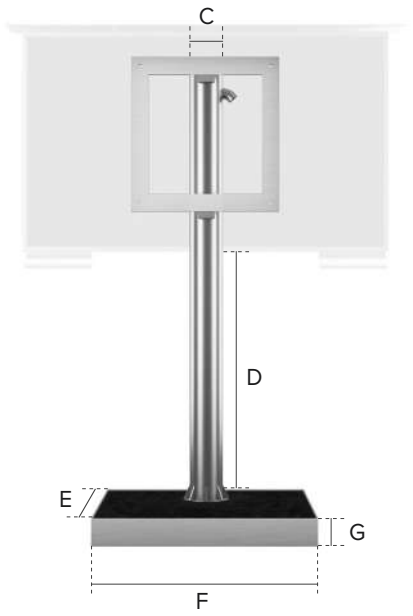

For Cosmos Outdoor TV 85”

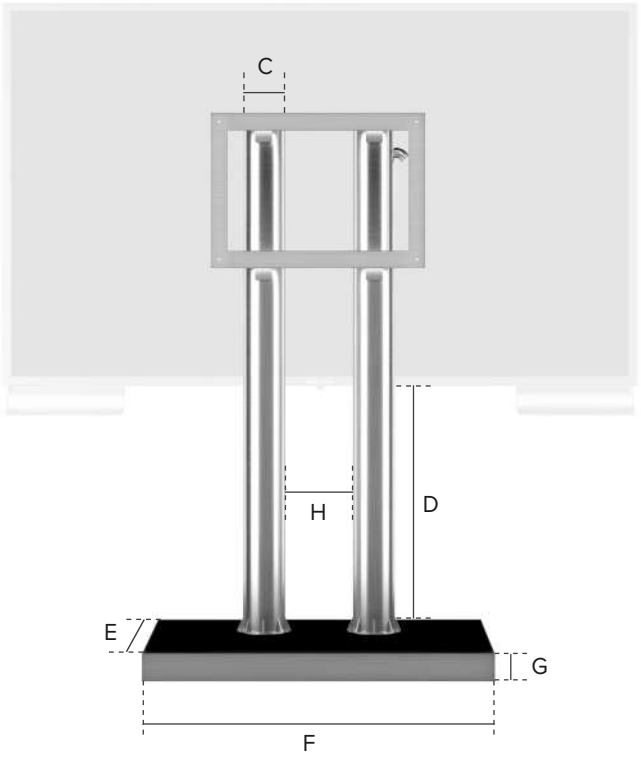

Product Code	TV Size	C	D	E	F	G	H
COSMT-SB-32	32”	3.15”/80mm	30.00”/760mm	15.00”/381mm	20.00”/508mm	3.00”/76mm	-
COSMT-SB-40	40”	3.15”/80mm	30.00”/760mm	15.00”/381mm	20.00”/508mm	3.00”/76mm	-
COSMT-SB-50	50”	3.15”/80mm	30.00”/760mm	15.00”/381mm	20.00”/508mm	3.00”/76mm	-
COSMT-SB-60	60”	4.00”/102mm	30.00”/760mm	20.00”/508mm	25.00”/635mm	3.00”/76mm	-
COSMT-SB-75	75”	4.50”/114mm	30.00”/760mm	25.00”/635mm	30.00”/760mm	3.00”/76mm	-
COSMT-SB-85	85”	5.00”/127mm	30.00”/760mm	25.00”/635mm	40.00”/1016mm	3.00”/76mm	-







CEILING MOUNT

DETAILS

- Available for all Cosmos Outdoor TV sizes
- Completely made of stainless steel (S304)
- The standard distance from top TV to ceiling is 8" (200mm); this can be customized when ordering
- Power cable is inserted from the end or from the side
- Very stable, rustproof and maintenance-free

FEATURES

Stainless Steel

Made of commercial-grade stainless steel (**S304**), the mounts are almost indestructible, do not rust, are easy to clean and do not need maintenance.

Cable Management

The power cable and HDMI cable (if used) are inside the tubes and well protected against weather and animals.

Stability

Outdoor TVs are exposed to extreme conditions and it's very important to mount the TV well. This can only be achieved with carefully designed mounts and brackets.

VESA Compatible

Cosmos Outdoor TV brackets and mounts are VESA compatible and therefore suitable for all TVs.

VESA BRACKETS

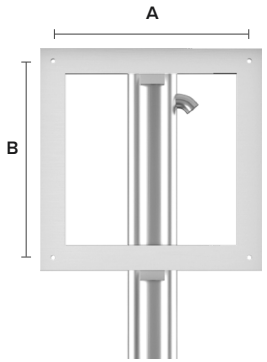

TV Size	A	B
32”	200mm	200mm
40”	200mm	200mm
50”	400mm	400mm
60”	400mm	400mm
75”	600mm	500mm
85”	600mm	400mm
100”	800mm	400mm
110”	450mm(2 sets)	600mm (2 sets)

Ceiling Mount Specifications

For Cosmos Outdoor TV 32” to 75”

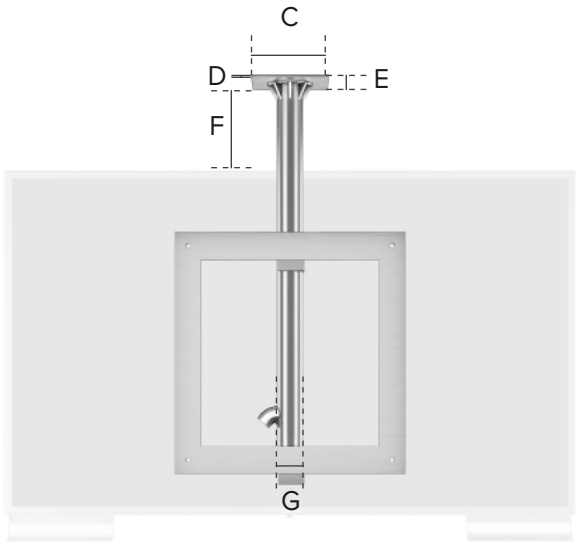

For Cosmos Outdoor TV 85” to 110”

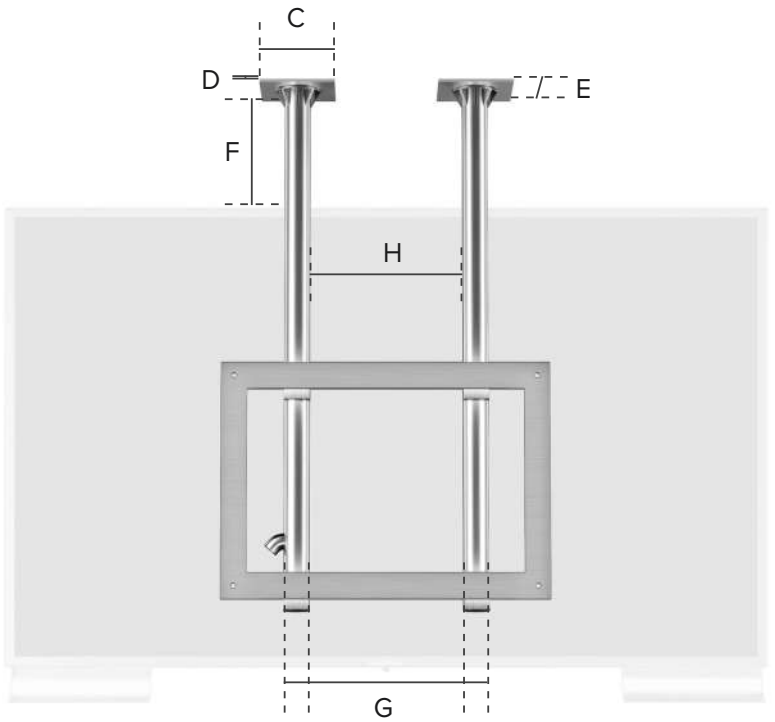

Product Code	TV Size	C	D	E	F	G	H
COSMT-CM-32	32”	5.90”/150mm	0.20”/5mm	8.00”/203mm	8.00”/203mm	2.00”/51mm	-
COSMT-CM-40	40”	5.90”/150mm	0.20”/5mm	8.00”/203mm	8.00”/203mm	2.00”/51mm	-
COSMT-CM-50	50”	5.90”/150mm	0.20”/5mm	8.00”/203mm	8.00”/203mm	2.00”/51mm	-
COSMT-CM-60	60”	5.90”/150mm	0.20”/5mm	8.00”/203mm	8.00”/203mm	2.00”/51mm	-
COSMT-CM-75	75”	5.90”/150mm	0.20”/5mm	8.00”/203mm	8.00”/203mm	2.00”/51mm	-
COSMT-CM-85	85”	5.90”/150mm	0.20”/5mm	8.00”/203mm	8.00”/203mm	2.00”/51mm	-
COSMT-CM-100	100”	5.90”/150mm	0.20”/5mm	8.00”/203mm	8.00”/203mm	2.00”/51mm	12.00”/305mm
COSMT-CM-110	110”	5.90”/150mm	0.20”/5mm	8.00”/203mm	8.00”/203mm	2.00”/51mm	12.00”/305mm

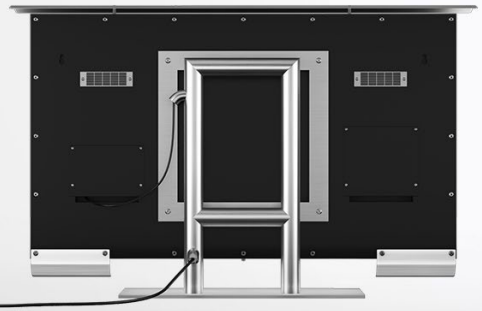





TABLE MOUNT

DETAILS

- Available for all Cosmos Outdoor TV sizes
- Completely made of stainless steel (S304)
- The standard distance from bottom TV to table 8" (200mm)
  This can be customized when ordering
- Very stable, rustproof and maintenance-free

FEATURES

Stainless Steel

Made of commercial-grade stainless steel (**S304**), the mounts are almost indestructible, do not rust, are easy to clean and do not need maintenance.

Cable Management

The power cable and HDMI cable (if used) are inside the tubes and well protected against weather and animals.

Stability

Outdoor TVs are exposed to extreme conditions and it's very important to mount the TV well. This can only be achieved with carefully designed mounts and brackets.

VESA Compatible

Cosmos Outdoor TV brackets and mounts are VESA compatible and therefore suitable for all TVs.

VESA BRACKETS

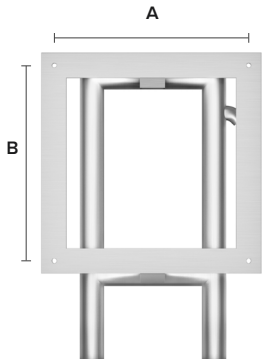

TV Size	A	B
32”	200mm	200mm
40”	200mm	200mm
50”	400mm	400mm
60”	400mm	400mm
75”	600mm	500mm
85”	600mm	400mm
100”	800mm	400mm
110”	450mm(2 sets)	600mm (2 sets)

Table Mount Specifications

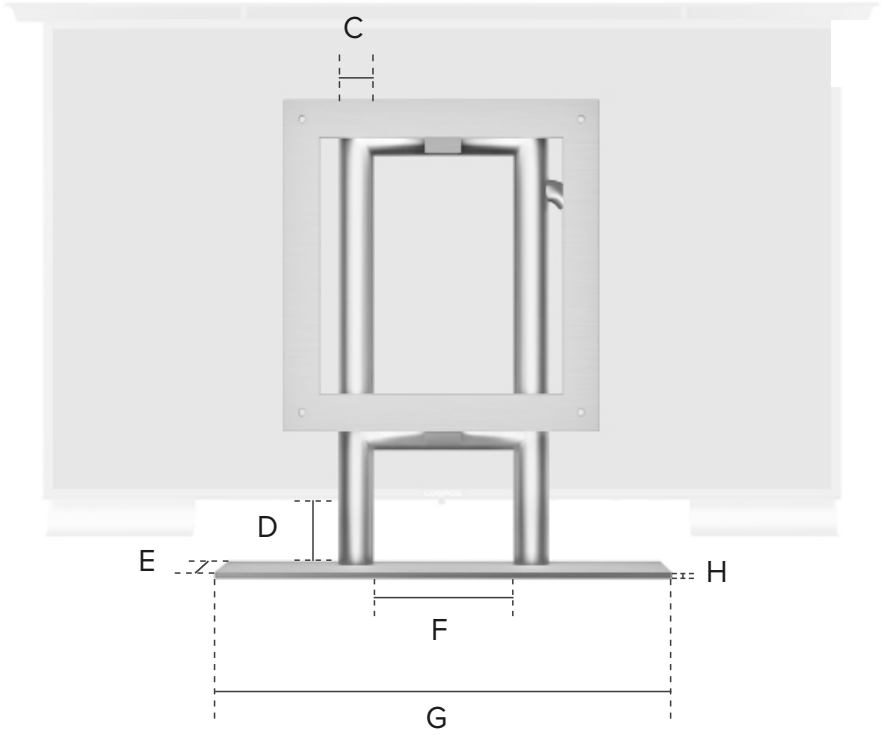

Product Code	TV Size	C	D	E	F	G	H
COSMT-DE-32	32”	2.00”/51mm	3.50”/90mm	8.00”/203mm	6.00”/152mm	20.00”/508mm	0.25”/6mm
COSMT-DE-40	40”	2.00”/51mm	3.50”/90mm	8.00”/203mm	6.00”/152mm	20.00”/508mm	0.25”/6mm
COSMT-DE-50	50”	2.00”/51mm	3.50”/90mm	10.00”/254mm	8.00”/203mm	25.00”/635mm	0.25”/6mm
COSMT-DE-60	60”	2.50”/64mm	3.50”/90mm	10.00”/254mm	10.00”/254mm	25.00”/635mm	0.25”/6mm
COSMT-DE-75	75”	2.50”/64mm	3.50”/90mm	15.00”/381mm	12.00”/305mm	30.00”/760mm	0.25”/6mm
COSMT-DE-85	85”	3.00”/76mm	3.50”/90mm	20.00”/508mm	16.00”/406mm	40.00”/1016mm	0.25”/6mm
COSMT-DE-100	100”	3.00”/76mm	3.50”/90mm	20.00”/508mm	20.00”/508mm	50.00”/1270mm	0.25”/6mm
COSMT-DE-110	110”	3.00”/76mm	3.50”/90mm	20.00”/508mm	20.00”/508mm	50.00”/1270mm	0.25”/6mm



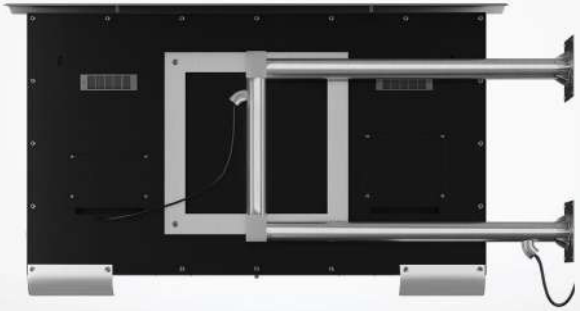

SIDE WALL MOUNT

DETAILS

- Available for Cosmos Outdoor TV sizes: 32", 40", 50", 60", and 75"
- Completely made of stainless steel (S304)
- The standard distance from side TV to wall 8" (200mm);
  This can be customized when ordering
- Bracket can be used on both sides
- Power cable insert from the end or the bottom
- Very stable, rustproof and maintenance-free

FEATURES

Stainless Steel

Made of commercial-grade stainless steel (**S304**), the mounts are almost indestructible, do not rust, are easy to clean and do not need maintenance.

Cable Management

The power cable and HDMI cable (if used) are inside the tubes and well protected against weather and animals.

Stability

Outdoor TVs are exposed to extreme conditions and it's very important to mount the TV well. This can only be achieved with carefully designed mounts and brackets.

VESA Compatible

Cosmos Outdoor TV brackets and mounts are VESA compatible and therefore suitable for all TVs.

VESA BRACKETS

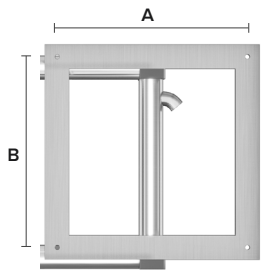

TV Size	A	B
32”	200mm	200mm
40”	200mm	200mm
50”	400mm	400mm
60”	400mm	400mm
75”	600mm	500mm

Side Wall Mount Specifications

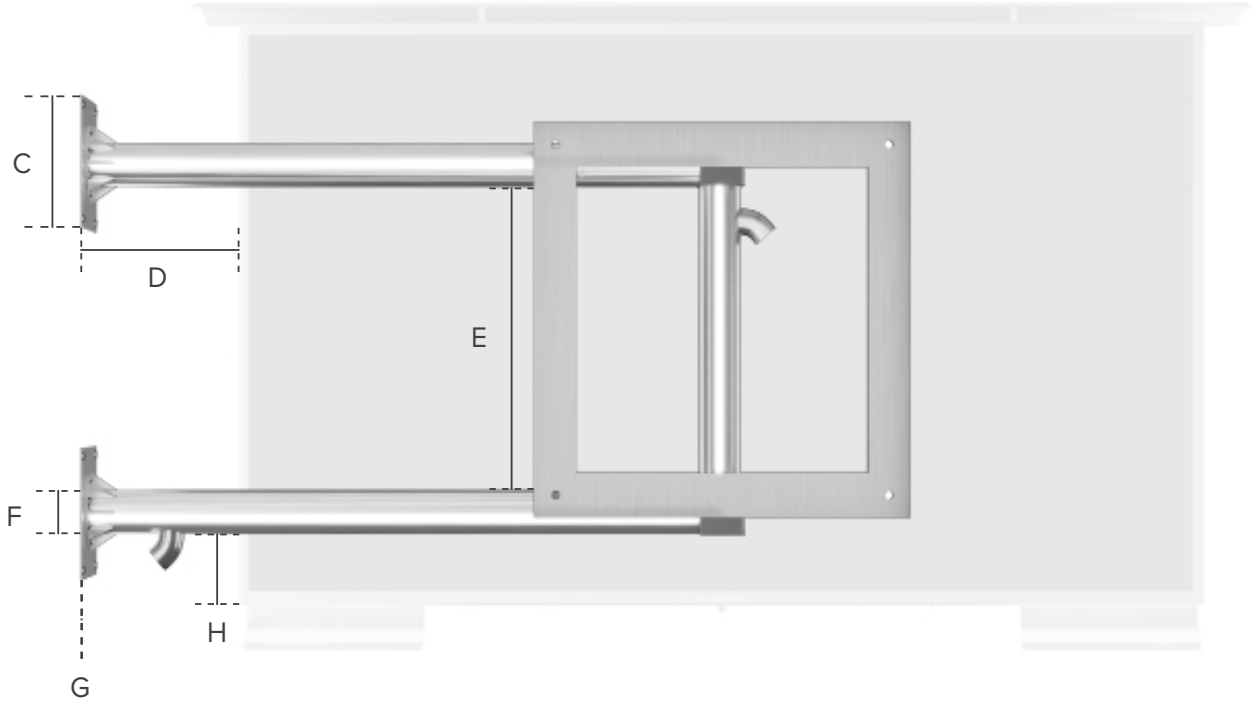

Product Code	TV Size	C	D	E	F	G
COSMT-SD-32	32”	5.90”/150mm	8.00”/203mm	5.89”/150mm	2.00”/51mm	3.95”/100mm
COSMT-SD-40	40”	5.90”/150mm	8.00”/203mm	5.89”/150mm	2.00”/51mm	4.20”/107mm
COSMT-SD-50	50”	5.90”/150mm	8.00”/203mm	11.78”/300mm	2.00”/51mm	3.95”/100mm
COSMT-SD-60	60”	5.90”/150mm	8.00”/203mm	11.78”/300mm	2.00”/51mm	6.20”/155mm
COSMT-SD-75	75”	5.90”/150mm	8.00”/203mm	15.72”/400mm	2.00”/51mm	8.00”/203mm

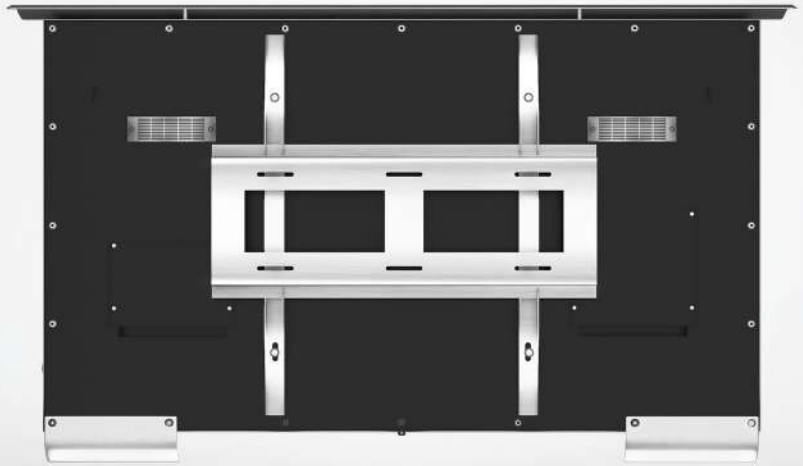



STAINLESS STEEL WALL MOUNT BRACKET

DETAILS

- Available for all Cosmos Outdoor TV sizes
- Designed for Cosmos that allows you to keep the rain cap on the TV when mounted
- Completely made of stainless steel (S304)
- Very stable, rustproof and maintenance-free

FEATURES

Stainless Steel

Made of commercial-grade stainless steel (**S304**), the mounts are almost indestructible, do not rust, are easy to clean and do not need maintenance.

Cable Management

The power cable and HDMI cable (if used) are inside the tubes and well protected against weather and animals.

Stability

Outdoor TVs are exposed to extreme conditions and it's very important to mount the TV well. This can only be achieved with carefully designed mounts and brackets.

VESA Compatible

Cosmos Outdoor TV brackets and mounts are VESA compatible and therefore suitable for all TVs.

Stainless Steel Wall Bracket Specifications

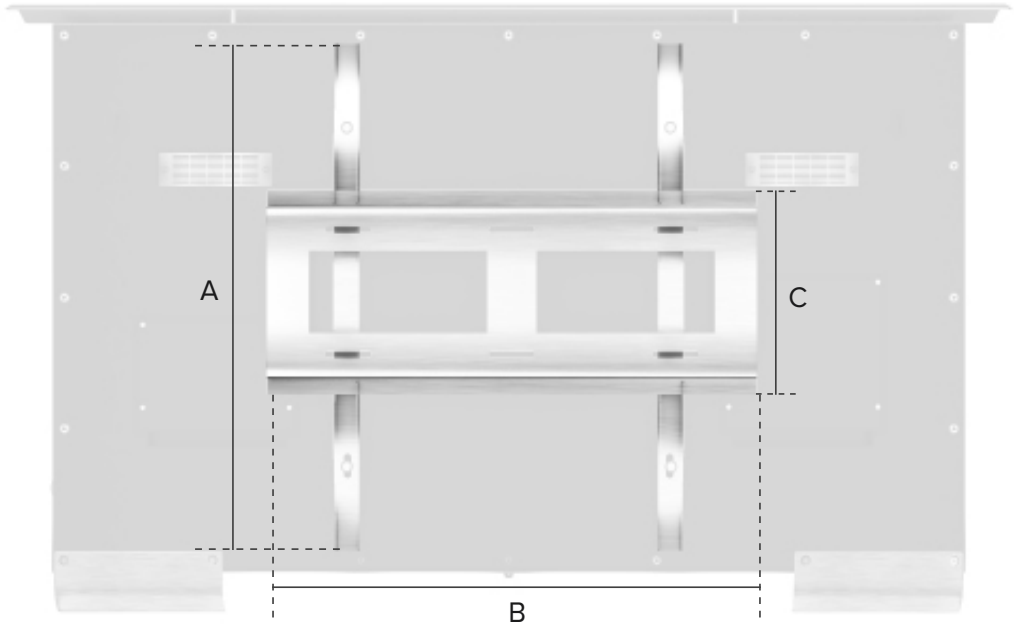

Product Code	TV Size	A	B	C
COSMT-BR-32	32”	15.80”/401mm	19.70”/500mm	9.40”/240mm
COSMT-BR-40	40”	15.80”/401mm	19.70”/500mm	9.40”/240mm
COSMT-BR-50	50”	23.60”/600mm	23.60”/600mm	9.40”/240mm
COSMT-BR-60	60”	23.60”/600mm	23.60”/600mm	9.40”/240mm
COSMT-BR-75	75”	31.50”/800mm	39.40”/1001mm	17.30”/440mm
COSMT-BR-85	85”	31.50”/800mm	39.40”/1001mm	17.30”/440mm
COSMT-BR-100	100” (comes with two brackets)	31.50”/800mm	39.40”/1001mm	17.30”/440mm
COSMT-BR-110	110” (comes with two brackets)	31.50”/800mm	39.40”/1001mm	17.30”/440mm





HOT TUB MOUNT

DETAILS

- Available for 40” and 50” Cosmos Outdoor TV sizes
- Completely made of stainless steel (S304)
- This mount can be quickly removed from the hot tub in case the cover is used
- A small adjustment to the cover needs to be made to keep this bracket installed
- Very stable, rustproof and maintenance-free

FEATURES

Stainless Steel

Made of commercial-grade stainless steel (**S304**), the mounts are almost indestructible, do not rust, are easy to clean and do not need maintenance.

Cable Management

The power cable and HDMI cable (if used) are inside the tubes and well protected against weather and animals.

Stability

Outdoor TVs are exposed to extreme conditions and it’s very important to mount the TV well. This can only be achieved with carefully designed mounts and brackets.

VESA Compatible

Cosmos Outdoor TV brackets and mounts are VESA compatible and therefore suitable for all TVs.

VESA BRACKETS

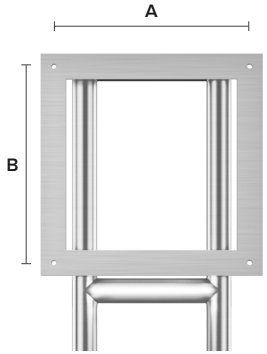

TV Size	A	B
40”	200mm	200mm
50”	400mm	400mm

Hot Tub Mount Specifications

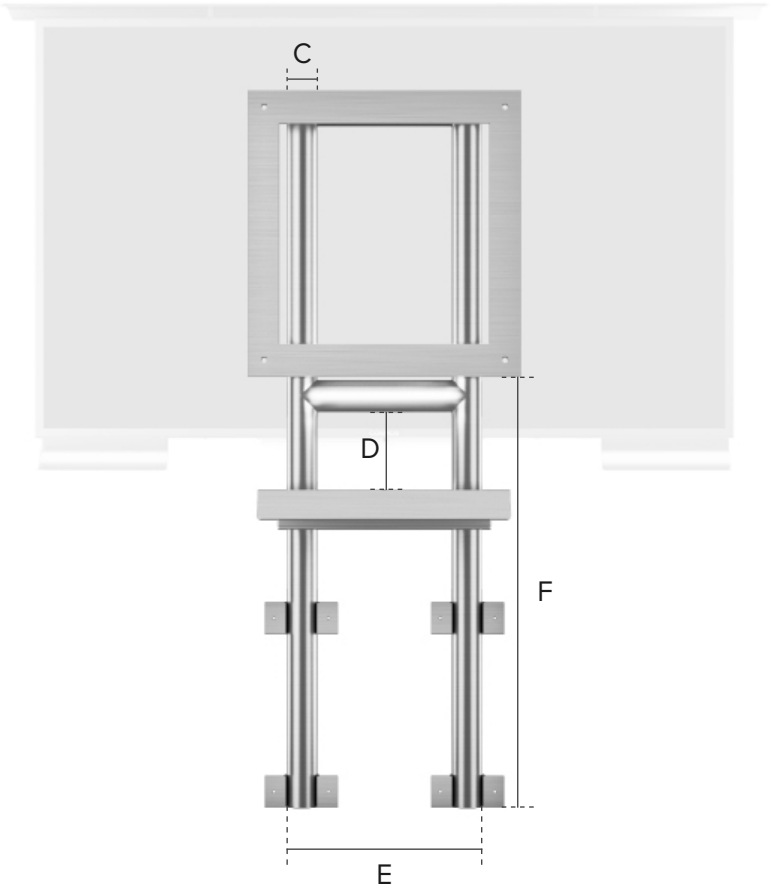

Product Code	TV Size	C	D	E	F
COSMT-HT-40	40”	8.00”/203mm	5.90”/150mm	5.89”/150mm	2.00”/51mm
COSMT-HT-50	50”	8.00”/203mm	5.90”/150mm	5.89”/150mm	2.00”/51mm





SWIVEL WALL MOUNT

Product Codes: COSMT-SW-32/40/50/60/75/85

DETAILS

- Available for Cosmos Outdoor TV sizes: 32", 40", 50", 60", 75", and 85"
- Completely made of aluminum
- Full swivel, 10 degrees pan, and push-in and pull-out mechanism
- Power cable insert from the end or the bottom
- Very stable, rustproof and maintenance-free

FEATURES

Cable Management

The power cable and HDMI cable (if used) are inside the tubes and well protected against weather and animals.

Stability

Outdoor TVs are exposed to extreme conditions and it's very important to mount the TV well. This can only be achieved with carefully designed mounts and brackets.

VESA Compatible

Cosmos Outdoor TV brackets and mounts are VESA compatible and therefore suitable for all TVs.

VESA BRACKETS



TV Size	Dimensions	
32"	200mm	200mm
40"	200mm	200mm
50"	400mm	400mm
60"	400mm	400mm
75"	600mm	500mm
85"	600mm	400mm

Swivel Wall Mount Specifications



	TV Size Range
TV Size Range	32”/813mm - 85”/2159mm
Maximum TV Weight	80kg
Distance to Wall	46mm - 485mm
Backplate	279mm H x 89mm W
Tilt	0°-15°
Swivel	90°/-90°
Pivot Points	4
Weight (kg)	5.28kg

TV Size	Packing Size (mm)
COSMT - SW - 32	802mm x 567mm x 185mm
COSMT - SW - 40	980mm x 680mm x 185mm
COSMT - SW - 50	1202mm x 722mm x 185mm
COSMT- SW - 60	1377mm x 917mm x 185mm
COSMT - SW - 75	1761mm x 1127mm x 220mm
COSMT - SW - 85	2015mm x 1277mm x 260mm





SWIVEL STANDING FLOOR MOUNT

DETAILS

- Available for Cosmos Outdoor TV sizes: 32", 40", and 50"
- Completely made of stainless steel (S304)
- Extra heavy and solid stainless-steel base
- Swivels left or right to achieve the ideal viewing angle
- Very stable, rustproof and maintenance-free

FEATURES

Stainless Steel

Made of commercial-grade stainless steel (**S304**), the mounts are almost indestructible, do not rust, are easy to clean and do not need maintenance.

Stability

Outdoor TVs are exposed to extreme conditions and it's very important to mount the TV well. This can only be achieved with carefully designed mounts and brackets.

VESA Compatible

Cosmos Outdoor TV brackets and mounts are VESA compatible and therefore suitable for all TVs.

VESA BRACKETS

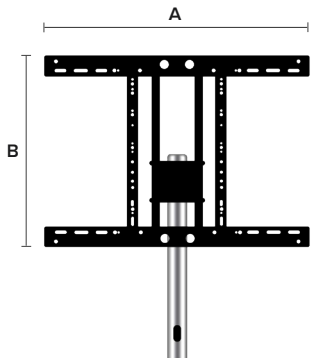

TV Size	A	B
32"	200mm	200mm
40"	200mm	200mm
50"	400mm	400mm

Swivel Standing Floor Mount Specifications

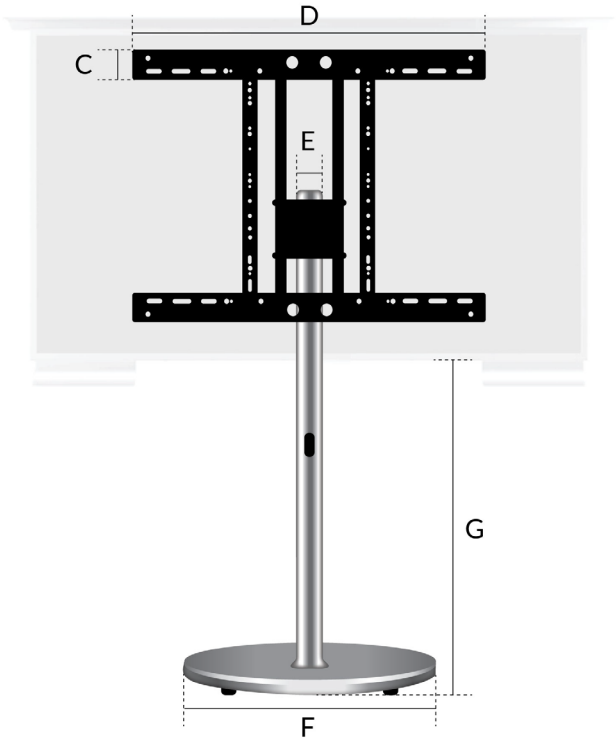

Product Code	TV Size	C	D	E	F	G	H
COSMT-RF-32	32”	2.2”/55mm	28.2”/716mm	2”/50mm	19.9”/506mm	23.5”/598mm	-
COSMT-RF-40	40”	2.2”/55mm	28.2”/716mm	2”/50mm	19.9”/506mm	21.8”/554mm	-
COSMT-RF-50	50”	2.2”/55mm	28.2”/716mm	2”/50mm	19.9”/506mm	19.7”/501mm	-





SOUNDWAVE CONCERT

COSSW-900

FEATURES



Left and Right Speakers

Dual speaker technology provides an excellent audio in your backyard. The speakers come standard on a 10" pole that can be mounted on a tile, brick or wood.



Subwoofer Included

Especially outdoors, a subwoofer makes an incredible difference when it comes to the sound quality.



Touch Screen Control

With the handy control box, you can change the inputs (Bluetooth for your smartphone), volume or the audio settings with a touch on the control screen.



Outdoor Audio Cables

The SoundWave Concert comes standard with outdoor audio cables. The speakers all connect to the back side of the control box which directly connects to the Cosmos Outdoor TV.

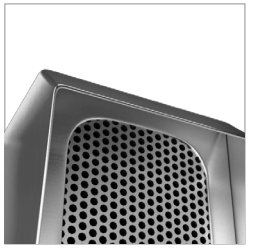

Made of Stainless Steel

The SoundWave Concert is completely made of high quality stainless-steel (S304). Rustproof, easy to clean and no maintenance needed.

Play it Your Way

Stream over Wi-Fi from compatible apps on your phone or laptop, play songs right over Bluetooth, or plug in your record player using a stereo cable.

AUX — AUX

Bluetooth

Connect any other device to the SoundWave Concert through the AUX or wirelessly through Bluetooth.

COSMOS™ | EVERVUE® ESTABLISHED 2001

www.evervue.com





SOUNDWAVE THEATER

COSSW-1000

FEATURES



Center Speaker

Equipped with three speakers, the center speaker supports the balanced audio between other speakers. All speakers are completely made of premium quality stainless-steel.



Main Speakers

The two full-sized main speakers will give an unforgettable audio experience. Like all other SoundWave outdoor speakers, SoundWave Theater is made of very durable, rustproof and maintenance-free stainless steel.



Side Speakers

The two side speakers come standard on a 15" stainless-steel pole that can be mounted on a tile, brick or wood.



Subwoofer

An essential part of any great sound system is the subwoofer. Especially outdoors, a subwoofer will make a big difference.

Note: The SoundWave Theater needs an additional amplifier that is not included. Any 5-speaker amplifier is compatible.





SOUNDWAVE CYLINDER

FEATURES



Stainless Elegance

SoundWave Cylinder is available in two sizes and made of stainless-steel which can be safely placed anywhere in your backyard or garden.

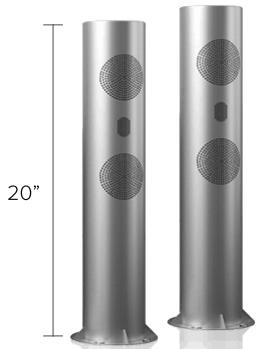

COSSW-C20

Different Sizes

With the two built-in speakers and the flexibility you have to install them anywhere in your garden, you can create an outdoor TV experience you'll enjoy every time.

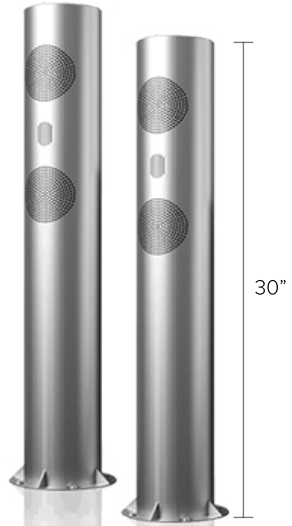

COSSW-C30

COSMOS™

EVERVUE®
ESTABLISHED 2001
www.evervue.com



COSMOS PROTECTIVE COVER

DETAILS

- The neoprene insulates the TV which significantly reduces temperature fluctuations during the day
- Made of double layer of neoprene and weather resistant fabric
- Available in different colors and patterns
- Reduces the power consumption of the built-in heater in the winter

FEATURES

Rain Resistant

Wind Resistant

Snow Resistant

Sun Resistant

Mold & Mildew Resistant

UV & Fade Resistant

Easy to Clean



Neoprene Cover Beige

Neoprene Cover Black

Neoprene Cover Blue

Neoprene Cover Green

Neoprene Cover White

Neoprene Cover Green Stripes

Neoprene Cover Yellow Stripes

Neoprene Cover Green and Red Stripes

Neoprene Cover Blue Stripes

Neoprene Cover Camouflage

sunbrella™ Collection



Neoprene Sunbrella - Black

Neoprene Sunbrella - Captain Navy

Neoprene Sunbrella - Earthly Brown

Neoprene Sunbrella - Iridescent Pearl

Neoprene Sunbrella - Ivy Green

Neoprene Sunbrella - Pacific Blue

Neoprene Sunbrella - Pepperdust

Neoprene Sunbrella - Sandy Beige

Neoprene Sunbrella - Sun Burst

Neoprene Sunbrella - Tor Red





ZEPP REMOTE PRO

RM-ZEPP-PRO

DETAILS

- Connectivity: Dual-mode (2.4G Wireless with USB dongle and Bluetooth 5.0).
- Control Distance: Up to 10 meters for both modes.
- Sensors & Keyboard: 3-axis gyroscope, accelerometer, full English QWERTY keyboard with 63 keys and backlighting.
- Touchpad & Voice Input: Integrated touchpad and Google Voice Assistant support with a dedicated button.
- Battery & Compatibility: Rechargeable Lithium-ion battery (<16mA), works with Android, Windows, Mac OS, and Linux.
- Design: Compact, ergonomic, double-sided (keyboard + touchpad), lightweight, and portable.

FEATURES

Water-Resistant

Microphone

Wi-Fi Keyboard

Volume Control

On-screen Mouse Control



GUY LINES CLAMP

COSAC-Clamp

DETAILS

- Highly recommended for unpredictable weather
- Ensures extra stability and support
- Can easily be attached to the mounting pole
- Creates immovable force against storms or other weather occurrences
- Use in high wind or public areas



KENSINGTON LOCK

COSAC-KST

DETAILS

- 6 ft, 3.5mm steel cable anchors your Cosmos Outdoor TV to a desk or immovable object
- Slim-profile lock attaches with superior locking strength
- Simple to set combination with easy view window, and comfort grip dials
- 10,000 personalized combination codes
- SAFE-tested for greater security and peace of mind

COSMOS™

YOUR OUTDOOR TELEVISION

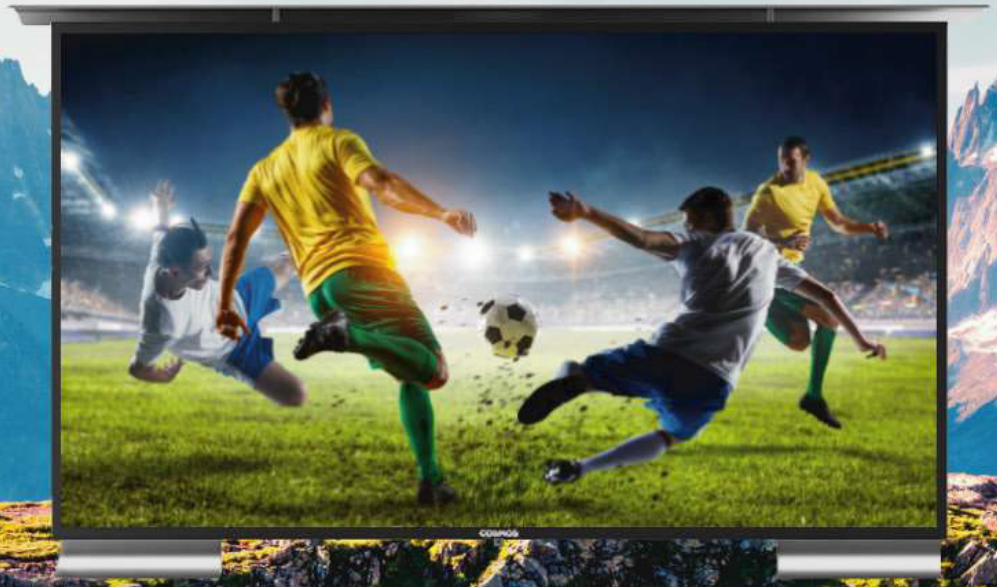

COSMOS OUTDOOR TV PRODUCT BROCHURE

Phone: +1 (949) 441 4262
WhatsApp: +1 (949) 403 8285
Email: sales@evervue.com
www.cosmosoutdoortv.com

Evervue USA Inc.
120 Newport Center Drive
Newport Beach, CA 92660
United States

Explore more of our products:
Instagram: evervueofficial
Facebook: evervueofficial
www.evervue.com

Information is subject to change without prior notification. © Copyright. Evervue USA Inc.

EVERVUE®
ESTABLISHED 2001
www.evervue.com