COSMOS™
MARINE



COSMOS MARINE TV PRODUCT BROCHURE

COSMOS™
MARINE



WEATHERPROOF OUTDOOR TELEVISION

Manufactured by Evervue, Cosmos Marine TV brings outdoor TV entertainment to a whole new level with its superior and state-of-the-art features and technology. Engineered with many years of experience and installations in almost all parts of the world, Cosmos Marine TV is a true outdoor TV that has been tested and experienced for all seasons, and under all conditions.

FEATURES

- **Weather-Resistant**
- **4K Ultra HD** (4K ULTRA HD)
- **Climate Control Technology**
- **Rain/Sun Cap**
- **Anti-Glare**
- **Audio Streamers**
- **Compartment for Set-Top Box**
- **Safe 24 Volts** (24-V)
- **Smart TV with Google Assistant**

TV FINISHES

Polished Stainless Steel



Cosmos Marine TV Sizes



Cosmos Marine TV
40” 4K Ultra HD
MCOS-40



Cosmos Marine TV
50” 4K Ultra HD
MCOS-50



Cosmos Marine TV
60” 4K Ultra HD
MCOS-60



Cosmos Marine TV
75” 4K Ultra HD
MCOS-75



Cosmos Marine TV
85” 4K Ultra HD
MCOS-85



Cosmos Marine TV
100” 4K Ultra HD
MCOS-100

Cosmos Marine TV Specifications

Diagonal Screen Size	40”	50”	60”	75”	85”	100”
Screen Resolution	3840 x 2160 (4K Ultra High Definition)					
TV Brightness (Actual)	350nit	500nit	350nit	500nit	500nit	500nit
Automatic Brightness Sensor	Comes standard with sensor and brightness reduced when it gets darker. These features can be disabled with a button on the back.					
Material TV Housing	Stainless Steel 316. Back side powder coated White Aluminum.					
Front Material	Heat strengthened, non-glare security glass.					
Cooling Technology	Duo Fan Active Cooling System. Turns on automatically if the temperature passes 85°F / 30°C (if connected to power).					
IP Rating	IPX4. This product must be installed in landscape (horizontal) orientation.					
Heating Technology	10-watt low Voltage heating system. Turns on if the temperature drops below 40°F / 5°C (if connected to power).					
Power	24 VDC, 14.6A. World universal power supply 100-240V included. Brand: MeanWell (UL Listed and CE Approved)			24 VDC, 18.8A. World universal power supply 100-240V included. Brand: MeanWell (UL Listed and CE Approved)		
Internal Speakers	2x 10-watt internal speakers					
Inputs	2x HDMI (CEC, ARC and EDID), Power, USB					
Outputs	Audio amplified, Audio non-amplified.					
Integrated set top compartment	Size 6” x 8” x 1.3” (compatible with Apple TV, Fire TV, Android TV and many other set top boxes. Some set top boxes need 100-240V power. You need to power this directly, and an IR repeater may be necessary).					
TV Net Weight	26.4lbs / 12kg	62lbs / 28kg	50.82lbs / 23.1kg	90.2lbs / 41kg	101.42lbs / 46.1kg	162.8lbs / 74kg
TV Overall Dimension (in)	35.8 x 20.5 x 2.4	44.6 x 25.7 x 2.4	51.5 x 29.8 x 2.4	66.6 x 38.1 x 2.4	76.6 x 44.0 x 3.9	86.9 x 49.6 x 3.9
TV Overall Dimension (mm)	910 x 520 x 60	1132 x 652 x 60	1307 x 758 x 60	1691 x 967 x 60	1945 x 1117 x 100	2208 x 1260 x 100
VESA Bracket	200 x 200	400 x 400	400 x 400	600 x 500	600 x 400	800 x 400
Standard Included	1x TV unit, 1x rain/sun cap, 2x audio streamers, 1x power supply, 1x 20ft. power cable, 1x remote control with holder, maintenance kit.					
Cover (optional)	Duo layer, waterproof nylon and 3mm neoprene.					

Cosmos Marine TV Comparison Table

Cosmos Marine TV		Other TV
Powered by low 24V, Cosmos Marine TV is safe to use outdoors.		110 to 240V on wet grass or near a pool can be dangerous.
Equipped with high-quality speakers & additional tweeters, Cosmos Marine TV has impressive audio.		Check with vendor if the speakers are included and if there are tweeters installed. It makes a big difference.
Patented audio streamers are very efficient and direct the audio towards you.		No, sound is spread out which reduces the audio performance and quality.
Patented weather cap protects Cosmos Marine TV from the rain, snow, leaves and small animals, which makes Cosmos the ultimate TV for outdoors.		No, not available.
All Cosmos Marine TVs come standard equipped with a fully automated heating and cooling system. Wherever you want to use Cosmos, it's ready.		No, only on the higher-priced models, and often there is no heater installed that keeps the moisture out in the winter.
Cosmos Marine TV has often been recognized as the best design for Outdoor TVs.		3" or more (for a system with temperature control).
Cosmos Marine TV has a Stainless Steel (S316) case and this makes the TV very strong, durable, and well protected.		No aluminum housing.
With a bezel of only 0.6", Cosmos is the most versatile looking outdoor TV.		1" or 2" bezels give the TV an industrial, old-fashioned look.

Cosmos Marine TV		Other TV
Comes standard equipped with real 4K resolution supporting the latest available Android version (may vary per market).		Not included, or with a dongle that does not support 4K, or not equipped with sufficient processing speed for great performance.
Update your Cosmos Marine TV with the latest technology. Simply replace the Set-Top Box and your Cosmos is as new again.		No. Integrated Smart TV system makes your TV old after a few years when better technology is available.
Cosmos Marine TV offers high-quality and beautifully made neoprene covers in many styles. Also available in Sunbrella fabric.		No, usually a simple cover that does not really protect.
Cosmos Marine TV comes standard with a 20 ft power cable and is ready to use when it arrives.		Usually comes with a 5 ft / 1.5 meter power cable, and you might need to buy an extra power cable.
Complete your Marine TV experience with our outdoor audio systems.		No, not available.
Comes standard with a remote control with built-in keyboard. Great for navigating the Smart TV applications.		No, and it is difficult to use the Smart TV applications.
Cosmos Marine TV has a wide-angle infrared receiver that separates it from regular indoor TVs.	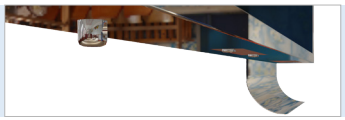	No, you need to stay in front of the TV to use the remote control.
Cosmos Marine TV offers many high-quality mounts to choose from. Extra stable to secure your Cosmos TV against wind, rain, animals.		No, usually residential-quality brackets made of regular steel that can rust.

Light Brightness Sensor

Our innovative light sensor system ensures that the television's brightness is perfectly optimized at all times. When daylight fades and darkness sets in, the light sensor detects the change and promptly dims the screen, providing a comfortable viewing experience without straining your eyes. This not only enhances your overall enjoyment but also contributes to significant energy savings of up to 65%.



Gaming Console Compatibility

For the gaming enthusiasts out there, you'll be thrilled to know that your Cosmos Marine TV is fully compatible with Xbox and PlayStation gaming consoles. Whether you're cruising through the Mediterranean or anchored off a Caribbean island, you can immerse yourself in your favorite games with unparalleled picture quality. Our TV provides the ultimate gaming experience, enabling vibrant graphics, smooth gameplay, and rapid response times.



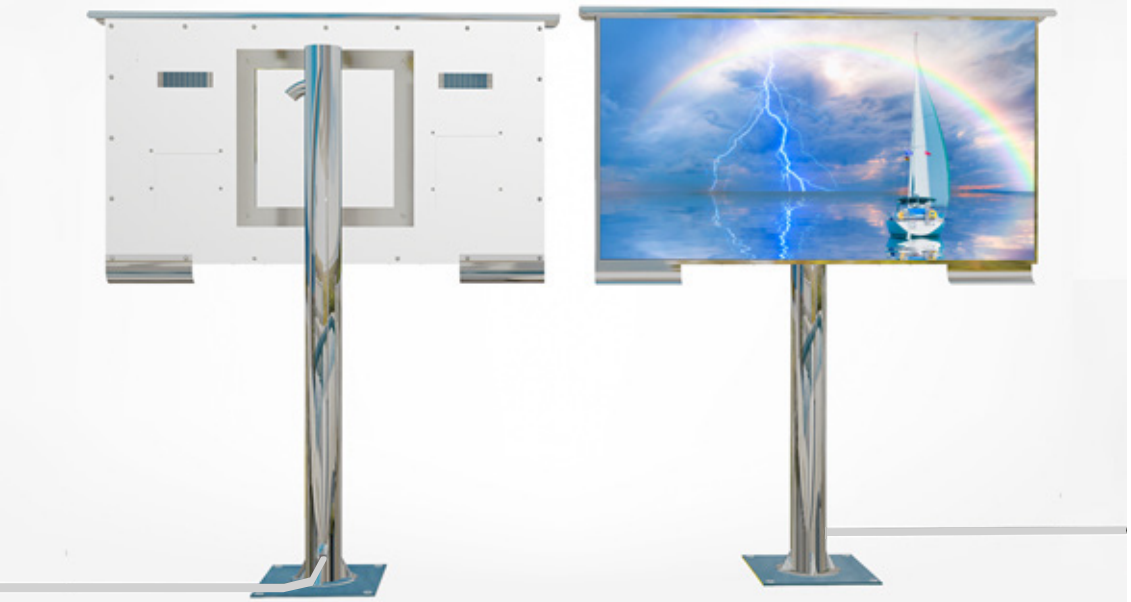



PERMANENT FLOOR MOUNT

DETAILS

- Available for all Cosmos Marine TV sizes.
- Completely made of stainless steel (S316)
- Power cable insertion from the bottom or the side.
- Very stable, rustproof, no maintenance required.

FEATURES

Stainless Steel

Cosmos Marine TV is made of high-grade stainless steel (S316). Very durable, indestructible, easy to maintain.

Cable Management

The power cable and (if used) HDMI cable are inside the tubes, and well protected against weather, animals, etc.

Stability

Cosmos Marine TVs are exposed to extreme conditions (wind, rain, snow, animals) and it's very important to mount the TV well, and this can only be achieved with specifically designed mounts and brackets.

VESA Compatible

Cosmos Marine TV brackets and mounts are VESA compatible and therefore suitable for all TVs.

VESA BRACKETS

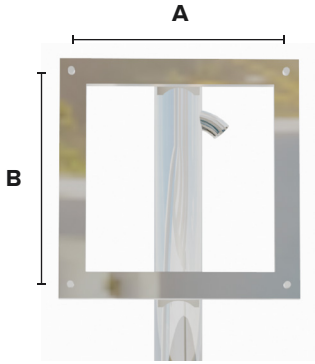

TV Size	A	B
40”	7.87" / 200 mm	7.87" / 200 mm
50”	15.75" / 400 mm	15.75" / 400 mm
60”	15.75" / 400 mm	15.75" / 400 mm
75”	23.62" / 600 mm	19.69" / 500 mm
85”	23.62" / 600 mm	15.75" / 400 mm
100”	31.50" / 800 mm	15.75" / 400 mm

Permanent Floor Mount Specifications

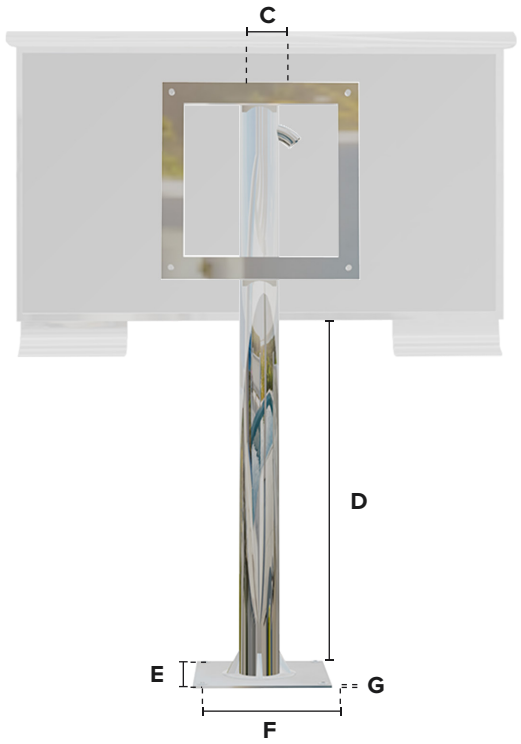

Product Code	TV Size	C	D	E	F	G
MCOSMT-PF-40”	40”	3.15” / 80 mm	30.00” / 760 mm	9.58” / 243 mm	9.58” / 243 mm	0.40” / 10 mm
MCOSMT-PF-50”	50”	4.00” / 102 mm	30.00” / 760 mm	9.58” / 243 mm	9.58” / 243 mm	0.40” / 10 mm
MCOSMT-PF-60”	60”	4.00” / 102 mm	30.00” / 760 mm	9.58” / 243 mm	9.58” / 243 mm	0.40” / 10 mm
MCOSMT-PF-75”	75”	4.50” / 114 mm	30.00” / 760 mm	9.58” / 243 mm	9.58” / 243 mm	0.40” / 10 mm
MCOSMT-PF-85”	85”	5.00” / 127 mm	30.00” / 760 mm	9.58” / 243 mm	9.58” / 243 mm	0.40” / 10 mm
MCOSMT-PF-100”	100”	6.00” / 152 mm	30.00” / 760 mm	9.58” / 243 mm	9.58” / 243 mm	0.40” / 10 mm





CEILING MOUNT

DETAILS

- Available for all Cosmos Marine TV sizes.
- Completely made of stainless steel (S316)
- The standard distance from the top of the TV to the ceiling is 8” (200 mm). This can be customized when ordering.

FEATURES

Stainless Steel

Cosmos Marine TV is made of high-grade stainless steel (S316). Very durable, indestructible, easy to maintain.

Cable Management

The power cable and (if used) HDMI cable are inside the tubes, and well protected against weather, animals, etc.

Stability

Cosmos Marine TVs are exposed to extreme conditions (wind, rain, snow, animals) and it’s very important to mount the TV well, and this can only be achieved with specifically designed mounts and brackets.

VESA Compatible

Cosmos Marine TV brackets and mounts are VESA compatible and therefore suitable for all TVs.

VESA BRACKETS

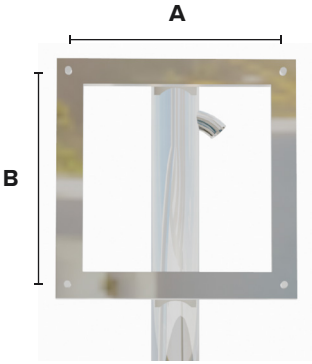

TV Size	A	B
40”	7.87" / 200 mm	7.87" / 200 mm
50”	15.75" / 400 mm	15.75" / 400 mm
60”	15.75" / 400 mm	15.75" / 400 mm
75”	23.62" / 600 mm	19.69" / 500 mm
85”	23.62" / 600 mm	15.75" / 400 mm
100”	31.50" / 800 mm	15.75" / 400 mm

Ceiling Mount Specifications

For Cosmos Marine 40” to 75”

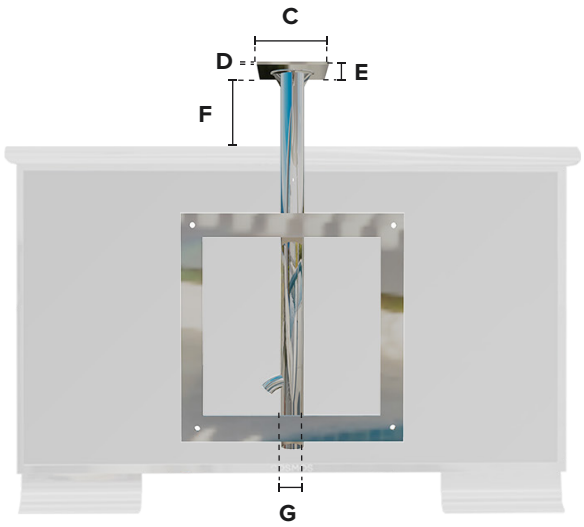

For Cosmos Marine 85” to 100”

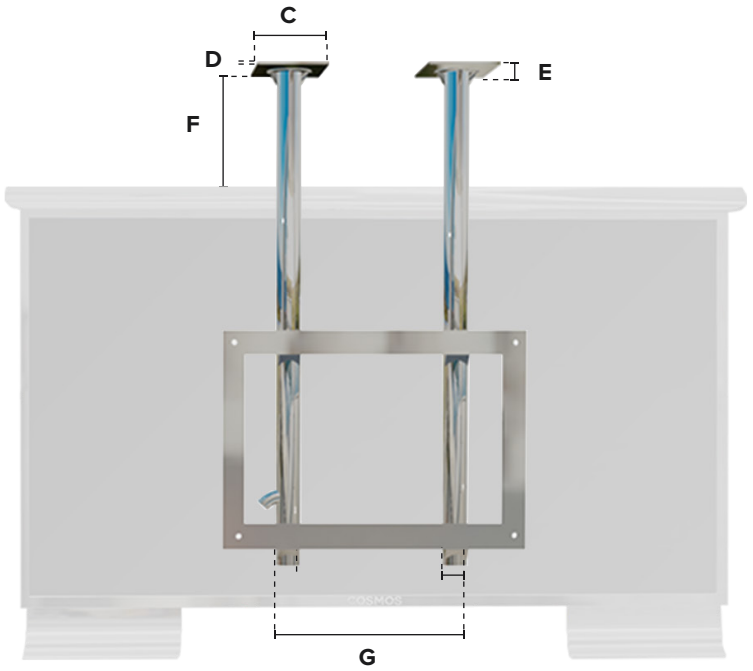

Product Code	TV Size	C	D	E	F	G	H
MCOSMT-CM-40”	40”	5.90” / 150 mm	0.20” / 5 mm	8.00” / 203 mm	8.00” / 203 mm	2.00” / 51 mm	-
MCOSMT-CM-50”	50”	5.90” / 150 mm	0.20” / 5 mm	8.00” / 203 mm	8.00” / 203 mm	2.00” / 51 mm	-
MCOSMT-CM-60”	60”	5.90” / 150 mm	0.20” / 5 mm	8.00” / 203 mm	8.00” / 203 mm	2.00” / 51 mm	-
MCOSMT-CM-75”	75”	5.90” / 150 mm	0.20” / 5 mm	8.00” / 203 mm	8.00” / 203 mm	2.00” / 51 mm	-
MCOSMT-CM-85”	85”	5.90” / 150 mm	0.20” / 5 mm	8.00” / 203 mm	8.00” / 203 mm	2.00” / 51 mm	-
MCOSMT-CM-100”	100”	5.90” / 150 mm	0.20” / 5 mm	8.00” / 203 mm	8.00” / 203 mm	2.00” / 51 mm	12.00” / 305 mm





STAINLESS STEEL WALL BRACKET

DETAILS

- Available for all Cosmos Marine TV sizes.
- Designed for Cosmos Marine TV, allowing you to keep the rain cap on the TV when mounted.
- Completely made of stainless steel (S316)
- Very stable, rustproof, no maintenance required.

FEATURES

Stainless Steel

Cosmos Marine TV is made of high-grade stainless steel (S316). Very durable, indestructible, easy to maintain.

Cable Management

The power cable and (if used) HDMI cable are inside the tubes, and well protected against weather, animals, etc.

Stability

Cosmos Marine TVs are exposed to extreme conditions (wind, rain, snow, animals) and it's very important to mount the TV well, and this can only be achieved with specifically designed mounts and brackets.

Stainless Steel Wall Bracket Specifications

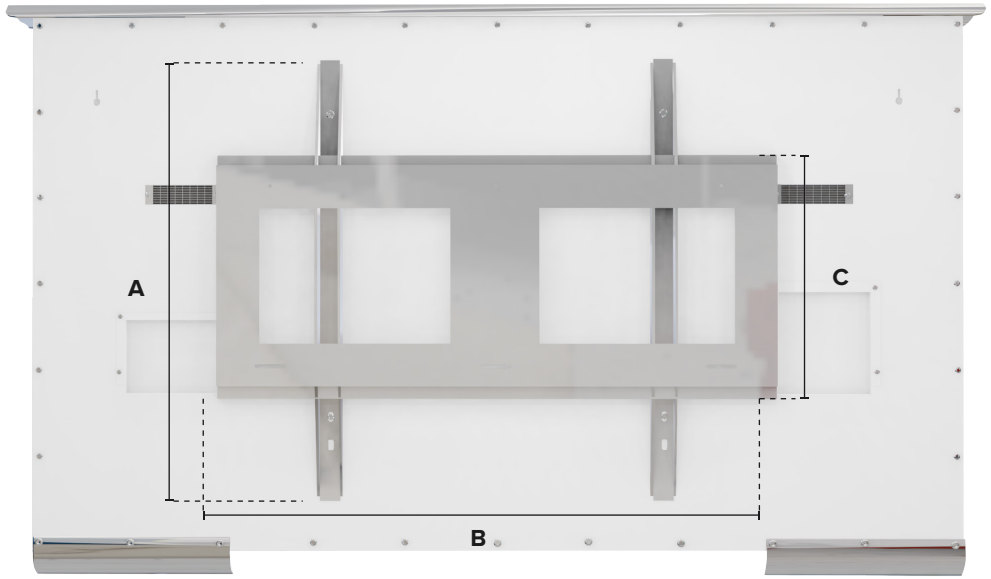

Product Code	TV Size	A	B	C
MCOSMT-BR-40”	40”	15.80” / 401 mm	19.70” / 500 mm	9.40” / 240 mm
MCOSMT-BR-50”	50”	23.60” / 600 mm	23.60” / 600 mm	9.40” / 240 mm
MCOSMT-BR-60”	60”	31.50” / 800 mm	39.40” / 1001 mm	17.30” / 440 mm
MCOSMT-BR-75”	75”	31.50” / 800 mm	39.40” / 1001 mm	17.30” / 440 mm
MCOSMT-BR-85”	85”	31.50” / 800 mm	39.40” / 1001 mm	17.30” / 440 mm
MCOSMT-BR-100”	100” (Comes with two brackets)	31.50” / 800 mm	39.40” / 1001 mm	17.30” / 440 mm

Immersive Sound, Enriching Experiences

A great viewing experience isn't complete without captivating sound. To take your onboard entertainment to the next level, Cosmos Marine 316 Stainless Steel TV proudly supports integration with Bose outdoor speakers.







COSMOS PROTECTIVE COVER

DETAILS

- The neoprene insulates the TV, which significantly reduces temperature fluctuations during the day.
- Made of a double layer of neoprene and weatherproof fabric.
- Available in different colors and patterns.
- Reduces the power consumption of the built-in heater in the winter.

FEATURES

Rain Resistant | **Wind Resistant** | **Snow Resistant** | **Sun Resistant** | **Mold & Mildew Resistant** | **UV & Fade Resistant** | **Easy to Clean**



Neoprene Cover Beige | Neoprene Cover Black | Neoprene Cover Blue | Neoprene Cover Green | Neoprene Cover White | Neoprene Cover Green Stripes | Neoprene Cover Yellow Stripes | Neoprene Cover Green and Red Stripes | Neoprene Cover Blue Stripes | Neoprene Cover Camouflage

sunbrella™ Collection



Neoprene Sunbrella - Black | Neoprene Sunbrella - Captain Navy | Neoprene Sunbrella - Earthly Brown | Neoprene Sunbrella - Iridescent Pearl | Neoprene Sunbrella - Ivy Green | Neoprene Sunbrella - Pacific Blue | Neoprene Sunbrella - Pepperdust | Neoprene Sunbrella - Sandy Beige | Neoprene Sunbrella - Sun Burst | Neoprene Sunbrella - Tor Red





LOGITECH K400

DETAILS

- Integrated wireless keyboard with touchpad
- Media-friendly TV keyboard
- Designed for laid-back control
- Logitech advanced 2.4GHz wireless connection
- 33ft / 10m wireless range
- USB interface
- Plug and Play Setup
- Customizable Control

FEATURES

Android Platform

We understand the importance of the seamless integration of your favorite apps and streaming services in your TV viewing experience. Therefore, the Cosmos Marine 316 Stainless Steel TV fully supports Android devices.

Volume Control

This keyboard features built-in hotkeys for Android platforms including:
Mute, Volume Down, Volume Up, Connect, and Power On/Off.

Wi-Fi Keyboard

Wireless and Compatible
Powerful, lag-free wireless gives you up to 10 meters.



ANDROID BOX

DETAILS

- Cosmos Marine TV optionally comes with a 4K Ultra HD Android TV Box.



APPLE TV

DETAILS

This means you have instant access to a universe of premium content, from the latest blockbusters on Netflix and the hottest shows on Apple TV+ to your favorite YouTube channels. Our TV enables you to navigate these platforms effortlessly, providing a streamlined and user-friendly experience.

v1.0.1

COSMOS™
MARINE



COSMOS MARINE TV PRODUCT BROCHURE

Evervue USA Inc.
120 Newport Center Drive
Newport Beach, CA 92660
United States

WhatsApp: +1 (949) 403 8285
Phone: +1 (949) 441 4262
Email: sales@evervue.com
www.cosmosoutdoortv.com/cosmos-marine

Explore more of our products:
Instagram: evervueofficial
Facebook: evervueofficial
www.evervue.com

Information is subject to change without prior notification. © Copyright Evervue USA Inc.

EVERVUE®
ESTABLISHED 2001
www.evervue.com